# DESCRIPTION OF COMPONENTS

## TX-RX UNIT (X57-369X-XX) 0-11 : K,P,X 0-12 : K2,P2 0-21 : M 0-22 : M2,M3 2-71 : E,E9,EM 2-72 : E2

| Ref. No | Use/Function | Operation/Condition compatibility |
|---|---|---|
| IC1 | 2nd local oscillator,<br>IF amplification,<br>Detection,<br>Low-frequency amplification,<br>Noise amplification,<br>Noise detection,<br>Squelch switching | 1 : 1st If signal input.<br>3, 4 : 2nd local oscillator.<br>9 : Busy output.<br>10 : Squelch control.<br>11 : S-meter output.<br>14 : RD output.<br>15 : Low-frequency output.<br> 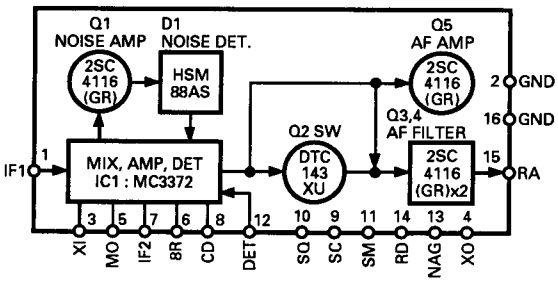 |
| IC2 | AM detector | |
| IC3 | AF amplification | 1 : AF input 6 : AF output |
| IC4 | Electronic volume conntrol,<br>AF switch | 2 : AF output.<br>3 : "L" during step-up.<br>4 : "L" during step-down.<br>5 : "H" when electronic volume selected.<br>7 : Panel volume input.<br>8 : Panel volume output.<br>10 : AF input. |
| IC5 | Shift register | See circuit description. |
| IC6 | 5V AVR | |
| IC7 | 10V AVR | For PLL. |
| IC8 | Transmit drive | |
| IC9 | 8V AVR | |
| IC201 | Microprocessor | See circuit description. |
| IC202 | 6V AVR | |
| Q1 | High-frequency amplification | Operates in receive mode. |
| Q2 | 11R switching | On when the aircraft band is selected. |
| Q3 | BPF switching | On when the aircraft band is selected. |
| Q4 | 1st mixer | Converts received 144MHz-range signals to 1st IF. |
| Q5 | High-frequency amplification | Amplifies 1st IF signal. |
| Q6 | Q5 gain control | |
| Q7 | Detector output switch | When the aircraft band is selected, the FM detection switch is turned off. |
| Q8 | AF amplifier | When the aircraft band is selected, the output signal from the AM detector is amplified. |
| Q9 (1/2) | RD line mute | On when DRS unit replays. |
| Q9 (2/2) | AF line mute | |
| Q10 | Low-frequency amplification | Operates when DRS unit replays. |
| Q12 | AF line mute | Operates when transmit mode, AL 1ch receive mode, CTCSS, T. ALT or squelch is on. |
| Q13 | 8R switching | On in receive mode. |
| Q14 | 8T switching | On in transmit mode. |
| Q15 | 8R switching control | On in receive mode. |
| Q16 | 8T switching control | On in transmit mode. |
| Q17 | 8T switching control | Off in transmit mode. |
| Q18 | 8T switching control | Off when PLL locked. |

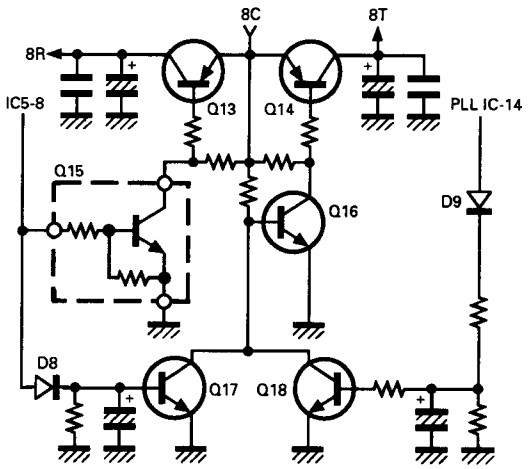

# DESCRIPTION OF COMPONENTS

| Ref. No | Use/Function | Operation/Condition compatibility |
|---|---|---|
| Q19 | Mic line mute | On in receive mode. |
| Q20 | PLL 8V ripple filter | |
| Q21 | CV line buffer | |
| Q22 | VCO output amplification | |
| Q23 | TX power select | On in HI or MID mode. |
| Q24 | TX power select | On in HI mode. |
| Q25 | TX drive stage +B control | |
| Q26 | Power switch | |
| Q27 | Power switch control | On when power switch is on. |
| Q28 | Squelch hysteresis | On when the squelch is on. |
| Q201, 202 | Function dimmer switch | Refer to circuit description. |
| Q203, 204 | Lamp dimmer switch | |
| Q205 | Lamp AVR | |
| Q206 | Lamp AVR | |
| Q207 | Reset switch | On for approx. 3ms when system power turned on. Usually off. |
| Q208 | Back-up switch | Off when 13.8V line becomes 7.5V or less. Usually on. |

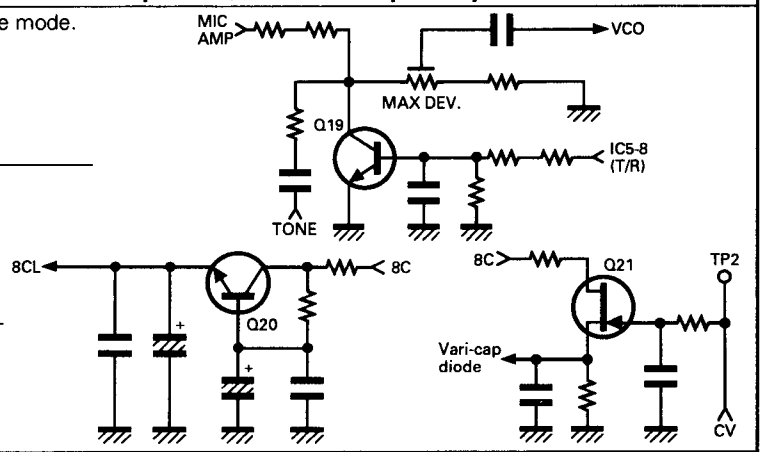


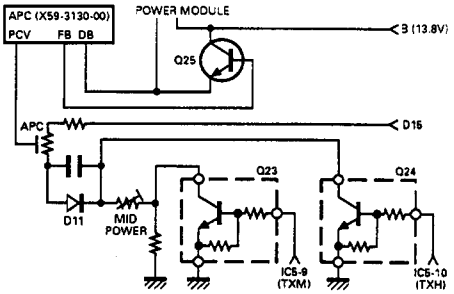


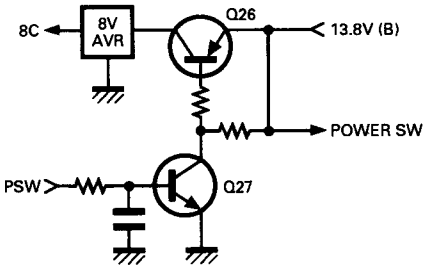


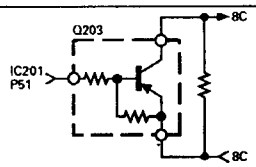


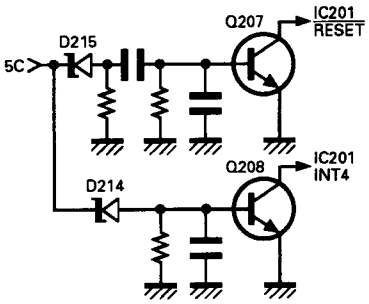

# DESCRIPTION OF COMPONENTS

| Ref. No | Use/Function | Operation/Condition compatibility |
|---|---|---|
| Q209, 210 | Dimmer switch on/off | Turn Q201~Q204 on or off.<br>Dimmer: 1 / 2 / 3 / 4<br>Q209: ON / OFF / ON / OFF<br>Q210: ON / ON / OFF / OFF |
| Q211 | Function drive switch | |
| Q212 | Mic mute | On when DTSS and paging codes are sent. |
| D1 | Band select switch (AM/FM) | On when the aircraft band is selected. |
| D2~6 | Vari-cap tuning | |
| D7~9 | Reverse current prevention | |
| D10 | VCO output switch | |
| D11 | Temperature compensation | For APC. |
| D12, 13 | Transmit/receive switching | |
| D14, 15 | Power detection | For APC. |
| D16 | Reverse power protection | |
| D202 | Lamp standard voltage | |
| D203 | Dimmer switch | |
| D204, 205 | Switch | D205 switches in the lithium battery when the power is off. |
| D206~211 | Used for destination setting | |
| D212 | CPU protector | |
| D213 | Reverse current prevention | |
| D214 | Back-up detection voltage | |
| D215 | Reset detection voltage | |
| D216 | Function LED | |
| D217 | Reverse current prevention | |

## PLL (X58-3470-00) : K,P,M,M2,M3,X,E,E2,E9,EM

| Ref. No | Use/Function | Operation/Condition compatibility |
|---|---|---|
| IC51 | PLL | 1 : VCO input. 133.300 to 135.295MHz (E,E9,EM), 133.300 to 137.295MHz (M), 125.300 to 163.295MHz (K,P,X,M2,M3,E2) in receive mode, 144.000 to 145.995MHz (E,E9,EM), 144.000 to 147.995MHz (K,P,X,M), 136.000 to 173.995MHz (M2,M3,E2) in transmit mode.<br>11 : "L" in transmit mode 14 : "H" when PLL unlocked |
| Q51 | VCO output buffer | |
| Q52 | Transmit switch | Off in transmit mode. |
| Q53 | Transmit switch | On for moment when transmission starts. |
| Q101, 102 | LPF | |
| Q1 | VCO output buffer | |
| Q2 | VCO | 133.300 to 135.295MHz (E,E9,EM), 133.300 to 137.295MHz (M), 125.300 to 163.295MHz (K,P,X,M2,M3,E2) in receive mode, 144.000 to 145.995MHz (E,E9,EM), 144.000 to 147.995MHz (K,P,X,M), 136.000 to 173.995MHz (M2,M3,E2) in transmit mode. |
| D1 | For modulation in TX mode | |
| D2 | VCO voltage control | |

# DESCRIPTION OF COMPONENTS

## PLL (X58-3500-11) : K2,P2

| Ref. No | Use/Function | Operation/Condition compatibility |
|---|---|---|
| IC1 | PLL | 1 : VCO input. 105.175 to 166.820MHz in receive mode, 144.000 to 147.995MHz in transmit mode.<br>10,11 : "H" in transmit mode 13 : Phase comparison output<br>14 : "H" when PLL unlocked 23 : Reference oscillation input |
| Q1, 2 | LPF | |
| Q3 | Transmit switch | On for an instant when transmission starts. |
| Q4 | VCO output amplification | 105.175 to 166.820MHz in receive mode, 144.000 to 147.995MHz in transmit mode. |
| Q101 | Receive VCO | 105.175 to 166.820MHz. |
| Q102 | Receive VCO switch | On in receive mode. |
| Q103 | Receive VCO output buffer | 105.175 to 166.820MHz. |
| Q104 | Transmit VCO | 144.000 to 147.995MHz. |
| Q105 | Transmit VCO switch | On in transmit mode. |
| Q106 | Transmit VCO output buffer | 144.000 to 147.995MHz. |
| D101, 102 | VCO voltage control | Receive. |
| D103 | VCO voltage control/ Varactor diode for modulation in transmit mode | |
| D104 | VCO voltage control | Transmission. |

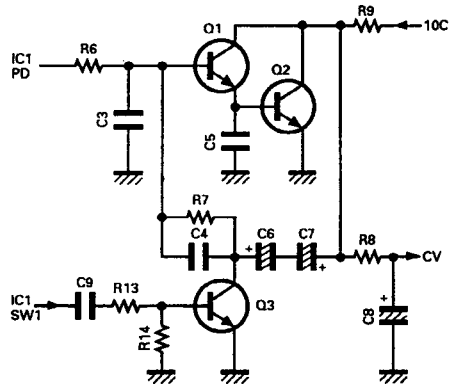


## APC (X59-3130-00)

| Ref. No | Use/Function | Operation/Condition compatibility |
|---|---|---|
| Q1 | Differential amplification | |
| Q2 (2/2) | APC control | |
| Q3 | Drive stage +B AVR | |

## MIC AMP (X59-3610-00)

| Ref. No | Use/Function | Operation/Condition compatibility |
|---|---|---|
| IC1 (1/2) | Limited amplification | |
| IC1 (2/2) | LPF | |
| Q1 | Low-frequency amplification | |

# PARTS LIST

* New Parts
Parts without **Parts No.** are not supplied.
Les articles non mentionnes dans le **Parts No.** ne sont pas fournis.
Teile ohne **Parts No.** werden nicht geliefert.

**TM-241A/E**

| Ref. No. 参照番号 | Address 位置 | New Parts 新 | Parts No. 部品番号 | Description 部品名／規格 | Destination 仕向 | Remarks 備考 |
|---|---|---|---|---|---|---|
| | | | **TM-241A/E** | | | |
| 1 | 1B | | A01-1065-03 | METALLIC CABINET(TOP) | | |
| 2 | 2B | | A01-1066-03 | METALLIC CABINET(BOTTOM) | | |
| 3 | 1C | | A10-1292-01 | CHASSIS CALKED ASSY | | |
| 4 | 2B | | A22-0770-13 | SUB PANEL | | |
| 5 | 2A | * | A62-0007-33 | PANEL ASSY | KMM2PX | |
| 5 | 2A | * | A62-0007-33 | PANEL ASSY | M3K2P2 | |
| 5 | 2A | * | A62-0008-33 | PANEL ASSY | EE2 | |
| 5 | 2A | * | A62-0008-33 | PANEL ASSY | EM,E9 | |
| | | | B42-3343-04 | S/NO LABEL(NAME PLATE) | | |
| | | | B42-3356-04 | LABEL(EXT SP) | | |
| 9 | 1B | | B42-3394-14 | FCC LABEL | KK2 | |
| 10 | 3E | | B42-5526-04 | LABEL | KK2 | |
| 11 | 1C | | B72-0093-04 | MODEL NAME PLATE | KPX | |
| 11 | 1C | | B72-0093-04 | MODEL NAME PLATE | K2P2 | |
| 11 | 1C | | B72-0094-04 | MODEL NAME PLATE | MM2M3 | |
| 11 | 1C | | B72-0095-14 | MODEL NAME PLATE | EE2E9 | |
| 11 | 1C | * | B72-0432-04 | MODEL NAME PLATE | EM | |
| 11 | 1C | * | B72-0651-14 | MODEL NAME PLATE | E9 | |
| 12 | 2B | | B11-0484-08 | FILTER(LCD) | | |
| 13 | 2B | | B30-0869-05 | LAMP | | |
| 14 | 2B | | B38-0330-05 | LCD ASSY | | |
| 15 | 1B,1C | | B42-2455-04 | LABEL(M4X8 MAX) | | |
| 16 | 1D | | B46-0310-03 | WARRANTY CARD | EE9E2 | |
| 16 | 2E | | B46-0410-30 | WARRANTY CARD | KK2 | |
| 16 | 1D | | B46-0422-00 | WARRANTY CARD | PP2 | |
| 17 | 1E | | B62-0031-10 | INSTRUCTION MANUAL | KXK2 | |
| 17 | 1D | | B62-0032-10 | INSTRUCTION MANUAL | MM2PM3 | |
| 17 | 1D | | B62-0032-10 | INSTRUCTION MANUAL | EE2E9 | |
| 17 | 1D | | B62-0032-10 | INSTRUCTION MANUAL | P2 | |
| 17 | 1E | | B62-0440-00 | INSTRUCTION MANUAL | EM | |
| 18 | 1D | | B62-0033-00 | INSTRUCTION MANUAL | EE2E9 | |
| | | | E31-3197-15 | CONNECTING WIRE(SP) | | |
| | | | E37-0051-05 | WIRE (POWER HIGH LOW) | EM | |
| 20 | 2D | | E30-2111-05 | DC CABLE | | |
| 21 | 1C | | E30-2137-15 | DC CABLE | | |
| 22 | 1C | | E30-2145-15 | ANT CABLE | | |
| | | * | F15-0677-04 | SHADE | | |
| 25 | 2D | | F51-0017-05 | FUSE 15A | | |
| 26 | 1C | | F51-0018-05 | FUSE 20A | | |
| 27 | 1B | | F20-0587-04 | INSULATING BOARD(LITHIUM BATT) | | |
| 28 | 1B | | F20-1059-04 | INSULATING BOARD(LITHIUM BATT) | | |
| | | | G02-0558-04 | FLAT SPRING (TX-RX B PATTERN) | | |
| 30 | 2C | | G02-0565-04 | FLAT SPRING (COIL) | KPX | |
| 30 | 2C | | G02-0565-04 | FLAT SPRING (COIL) | K2P2 | |
| | | | G13-0926-04 | CUSHION (CONT) | | |
| 32 | 1B,1C | | G02-0576-14 | FLAT SPRING | | |
| 33 | 2A | | G09-0405-05 | SPRING (KNOB) | | |
| | | | G10-0651-04 | NON-WOVEN FABRIC(SP) | | |
| 35 | 1B,2C | | G10-0681-04 | NON-WOVEN FABRIC(CHASSIS) | | |
| 36 | 1B,2C | | G10-0686-04 | NON-WOVEN FABRIC(CASE) | | |
| | | * | G10-0747-04 | NON-WOVEN FABRIC(LCDASSY) | K2P2 | |
| | | * | G13-0959-04 | CUSHION (TX-RX) | K2P2 | |

**L:**Scandinavia **K:**USA **P:**Canada
**Y:**PX(Far East, Hawaii) **T:**England **E:**Europe
**Y:**AAFES(Europe) **X:**Australia **M:**Other Areas

**TM-241A : (K,P,X,M,M2,M3,K2,P2)**
**TM-241E : (E,E2,E9,EM)**

⚠ indicates safety critical components.

# PARTS LIST

* New Parts
Parts without **Parts No.** are not supplied.
Les articles non mentionnes dans le **Parts No.** ne sont pas fournis.
Teile ohne **Parts No.** werden nicht geliefert.

**TM-241A/E**

| Ref. No. 参照番号 | Address 位置 | New Parts 新 | Parts No. 部品番号 | Description 部品名／規格 | Destination 仕向 | Remarks 備考 |
|---|---|---|---|---|---|---|
| 39 | 2B | | G13-0906-04 | CUSHION (3KEY) | | |
| 40 | 2A | | G13-0960-04 | CUSHION (6KEY) | | |
| 41 | 2B | | G13-0961-04 | CUSHION (LOW) | | |
| 43 | 3E | | H10-2658-02 | POLYSTYRENE FOAMED FIXTURE | | |
| 44 | 1E | | H11-0822-04 | POLYSTYRENE PLATE | KXK2EM | |
| 45 | 1D | | H11-0823-04 | POLYSTYRENE PLATE | MM2P | |
| 45 | 1D | | H11-0823-04 | POLYSTYRENE PLATE | M3P2 | |
| 46 | 2E | | H13-0814-04 | PROTECTION PLATE | | |
| 47 | 1D | | H13-0825-04 | PROTECTION SHEET | MM2PM3 | |
| 47 | 1D | | H13-0825-04 | PROTECTION SHEET | P2 | |
| 47 | 1D | | H13-0825-04 | PROTECTION SHEET | EE2E9 | |
| 48 | 2D | | H25-0029-04 | PROTECTION BAG(MIC HOOK) | KPK2P2 | |
| 49 | 2D | | H25-0117-04 | PROTECTION BAG(DC CABLE) | | |
| 50 | 2E | | H25-0720-04 | PROTECTION BAG(RADIO) | | |
| | | | H25-0750-04 | PROTECTION BAG | EE2E9 | |
| 51 | 3D | | H52-0054-04 | ITEM CARTON BOX | KMM2PX | |
| 51 | 3D | | H52-0054-04 | ITEM CARTON BOX | M3K2P2 | |
| 51 | 3D | | H52-0055-04 | ITEM CARTON BOX | EE2E9 | |
| 51 | 3D | * | H52-0301-04 | ITEM CARTON BOX | EM | |
| 53 | 1C | | J19-1434-04 | HOLDER(SP) | | |
| 54 | 2D | | J20-0319-24 | MIC HOOK | KPK2P2 | |
| 55 | 2A | | J21-4303-08 | MOUNTING HARDWARE(LCD ASSY) | | |
| 56 | 2E | | J29-0436-03 | BRACKET | | |
| 58 | 2B | | K27-3035-14 | KNOB(ENCODER) | | |
| 59 | 2B | | K27-3066-04 | KNOB(POWER SW) | | |
| 60 | 2B | | K27-3067-04 | KNOB(LOW) | | |
| 61 | 2A | | K27-3068-14 | KNOB(CALL) | | |
| 62 | 2A | | K27-3069-14 | KNOB(FUNC) | | |
| 63 | 2A | | K27-3071-14 | KNOB(TONE) | | |
| 64 | 2A | | K27-3072-14 | KNOB(REVERSE) | | |
| 65 | 2A | | K27-3074-14 | KNOB(SHIFT) | | |
| 66 | 2A | | K27-3075-14 | KNOB(DR/DT) | | |
| 67 | 2A | | K29-3156-04 | KNOB(MAIN) | | |
| 68 | 2A | | K29-3157-04 | KNOB(VOL,SQL) | | |
| 70 | 2D | | N99-0331-05 | SCREW SET | | |
| 71 | 2D | | N46-3010-46 | PAN HEAD TAPPING SCREW | KPK2P2 | |
| A | 2B | * | N67-3010-41 | SCREW(POWER MODULE 3X10) | | |
| B | 2B | | N38-2640-46 | SCREW(SUB PANEL) | | |
| C | 1C,2C | | N33-2606-45 | OVAL HEAD MACHINE SCREW(CASE) | | |
| D | 1C,2C | | N87-2606-46 | BRAZIER HEAD TAPTITE SCREW | | |
| E | 2B | | N87-2610-46 | BRAZIER HEAD TAPTITE SCREW | | |
| F | 2B | | N88-2606-46 | FLAT HEAD TAPTITE SCREW | | |
| 73 | 2E | | T91-0379-35 | MICROPHONE | MM2X | |
| 73 | 2E | | T91-0380-45 | MICROPHONE(DTMF) | KPM3 | |
| 73 | 2E | | T91-0380-45 | MICROPHONE(DTMF) | K2P2 | |
| 73 | 2E | * | T91-0382-35 | MICROPHONE(1750Hz TONE) | EE2 | |
| 73 | 2E | * | T91-0382-35 | MICROPHONE(1750Hz TONE) | EM,E9 | |
| SP | 1C | | T07-0246-05 | LOUDSPEAKER | | |
| IC1 | | | LC7582 | IC(LCD DRIVER) | | |
| IC301 | 2C | | S-AV17 | IC(POWER MODULE FOR 144MHZ) | | |
| 75 | 2D | | W01-0414-04 | WRENCH | | |
| 76 | 2B | | W09-0326-05 | LITHIUM BATTERY | | |

**L:**Scandinavia **K:**USA **P:**Canada
**Y:**PX(Far East, Hawaii) **T:**England **E:**Europe
**Y:**AAFES(Europe) **X:**Australia **M:**Other Areas

**TM-241A : (K,P,X,M,M2,M3,K2,P2)**
**TM-241E : (E,E2,E9,EM)**

⚠ indicates safety critical components.

# PARTS LIST

* New Parts
Parts without **Parts No.** are not supplied.
Les articles non mentionnes dans le **Parts No.** ne sont pas fournis.
Teile ohne **Parts No.** werden nicht geliefert.

**TM-241A/E**
**TX-RX UNIT (X57-369X-XX)**

| Ref. No. 参照番号 | Address 位置 | New Parts 新 | Parts No. 部品番号 | Description 部品名／規格 | Destination 仕向 | Remarks 備考 |
|---|---|---|---|---|---|---|
| 77 | 2B,2C | | X57-3690-11 | TX·RX UNIT | KPX | |
| 77 | 2B,2C | * | X57-3690-12 | TX·RX UNIT | K2P2 | |
| 77 | 2B,2C | | X57-3690-21 | TX·RX UNIT | M | |
| 77 | 2B,2C | | X57-3690-22 | TX·RX UNIT | M2M3 | |
| 77 | 2B,2C | | X57-3692-71 | TX·RX UNIT | EE9,EM | |
| 77 | 2B,2C | | X57-3692-72 | TX·RX UNIT | E2 | |
| **TX-RX UNIT (X57-369X-XX) 0-11 : (K,P,X) 0-12 : (K2,P2) 0-21 : (M) 0-22 : (M2,M3) 2-71 : (E,E9,EM) 2-72 : (E2)** | | | | | | |
| C1 | | | CC73FCH1H040C | CHIP C 4PF C | | |
| C2 | | | CC73FCH1H060D | CHIP C 6PF D | KPX | |
| C2 | | | CC73FCH1H050C | CHIP C 5PF D | K2P2 | |
| C3 | | | CC73FCH1H040C | CHIP C 4PF C | KPX | |
| C3 | | | CC73FCH1H040C | CHIP C 4PF C | K2P2 | |
| C3 | | | CC73FCH1H070D | CHIP C 7PF D | MM2M3E | |
| C3 | | | CC73FCH1H070D | CHIP C 7PF D | E2E9EM | |
| C4 ,5 | | | CK73FB1H102K | CHIP C 1000PF K | KPX | |
| C4 ,5 | | | CK73FB1H102K | CHIP C 1000PF K | K2P2 | |
| C6 ,7 | | | CK73FB1H102K | CHIP C 1000PF K | | |
| C8 | | | CK73FB1H103K | CHIP C 0.010UF K | | |
| C9 | | | CK73FB1H102K | CHIP C 1000PF K | | |
| C10 | | | CC73FCH1H0R5C | CHIP C 0.5PF C | | |
| C11 | | | CC73FCH1H470J | CHIP C 47PF J | KPXMM2 | |
| C11 | | | CC73FCH1H470J | CHIP C 47PF J | M3EE9 | |
| C11 | | | CC73FCH1H470J | CHIP C 47PF J | EM,E2 | |
| C11 | | | CC73FCH1H680J | CHIP C 68PF J | K2P2 | |
| C12 | | | CK73FB1H103K | CHIP C 0.010UF K | | |
| C13 | | | CC73FCH1H0R5C | CHIP C 0.5PF C | | |
| C14 | | | CC73FCH1H470J | CHIP C 47PF J | KPXMM2 | |
| C14 | | | CC73FCH1H470J | CHIP C 47PF J | M3EE9 | |
| C14 | | | CC73FCH1H470J | CHIP C 47PF J | EM,E2 | |
| C14 | | | CC73FCH1H680J | CHIP C 68PF J | K2P2 | |
| C15 | | | CK73FB1H102K | CHIP C 1000PF K | | |
| C16 | | | CC73FCH1H150J | CHIP C 15PF J | | |
| C17 | | | CC73FCH1H470J | CHIP C 47PF J | KPXMM2 | |
| C17 | | | CC73FCH1H470J | CHIP C 47PF J | M3EE9 | |
| C17 | | | CC73FCH1H470J | CHIP C 47PF J | EM,E2 | |
| C17 | | | CC73FCH1H680J | CHIP C 68PF J | K2P2 | |
| C18 | | | CK73FB1H103K | CHIP C 0.010UF K | | |
| C19 | | | CC73FCH1H030C | CHIP C 3PF C | | |
| C20 | | | CK73FB1H102K | CHIP C 1000PF K | | |
| C21 | | | CK73FB1H103K | CHIP C 0.010UF K | | |
| C22 | | | CK73FB1H102K | CHIP C 1000PF K | | |
| C23 | | | CC73FCH1H050C | CHIP C 5PF C | KPXMM2 | |
| C23 | | | CC73FCH1H050C | CHIP C 5PF C | M3EE9 | |
| C23 | | | CC73FCH1H050C | CHIP C 5PF C | EM,E2 | |
| C23 | | | CC73FCH1H080D | CHIP C 8PF D | K2P2 | |
| C24 | | | CK73FB1H102K | CHIP C 1000PF K | | |
| C25 | | | CK73FB1H103K | CHIP C 0.010UF K | | |
| C26 | | | CC73FCH1H220J | CHIP C 22PF J | KPXMM2 | |
| C26 | | | CC73FCH1H220J | CHIP C 22PF J | M3EE9 | |
| C26 | | | CC73FCH1H220J | CHIP C 22PF J | EM,E2 | |
| C27 | | | CK73FB1H102K | CHIP C 1000PF K | | |
| C28 | | | CC73FCH1H330J | CHIP C 33PF J | KPXMM2 | |
| C28 | | | CC73FCH1H330J | CHIP C 33PF J | M3EE9 | |
| C28 | | | CC73FCH1H330J | CHIP C 33PF J | EM,E2 | |

**L:**Scandinavia **K:**USA **P:**Canada
**Y:**PX(Far East, Hawaii) **T:**England **E:**Europe
**Y:**AAFES(Europe) **X:**Australia **M:**Other Areas

**TM-241A : (K,P,X,M,M2,M3,K2,P2)**
**TM-241E : (E,E2,E9,EM)**

⚠ indicates safety critical components.

# PARTS LIST

× New Parts
Parts without **Parts No.** are not supplied.
Les articles non mentionnes dans le **Parts No.** ne sont pas fournis.
Teile ohne **Parts No.** werden nicht geliefert.

**TX-RX UNIT (X57-369X-XX)**

| Ref. No. 参照番号 | Address 位置 | New Parts 新 | Parts No. 部品番号 | Description 部品名／規格 | | | Destination 仕向 | Remarks 備考 |
|---|---|---|---|---|---|---|---|---|
| C28 | | | CC73FCH1H100D | CHIP C | 10PF | D | K2P2 | |
| C29 | | | CC73FCH1H151J | CHIP C | 150PF | J | KPXMM2 | |
| C29 | | | CC73FCH1H151J | CHIP C | 150PF | J | M3EE9 | |
| C29 | | | CC73FCH1H151J | CHIP C | 150PF | J | EM,E2 | |
| C29 | | | CK73FB1H102K | CHIP C | 1000PF | K | K2P2 | |
| C30 | | | CK73FB1H102K | CHIP C | 1000PF | K | KPX | |
| C30 | | | CK73FB1H102K | CHIP C | 1000PF | K | K2P2 | |
| C31 | | | CC73FSL1H101J | CHIP C | 100PF | J | KPX | |
| C31 | | | CC73FSL1H101J | CHIP C | 100PF | J | K2P2 | |
| C32 | | | CK73EF1C105Z | CHIP C | 1.0UF | Z | KPX | |
| C32 | | | CK73EF1C105Z | CHIP C | 1.0UF | Z | K2P2 | |
| C33 | | | CK73FB1H223K | CHIP C | 0.022UF | K | KPX | |
| C33 | | | CK73FB1H223K | CHIP C | 0.022UF | K | K2P2 | |
| C34 | | | CK73FB1H333K | CHIP C | 0.033UF | K | KPX | |
| C34 | | | CK73FB1H333K | CHIP C | 0.033UF | K | K2P2 | |
| C35 | | | C92-0004-05 | ELECTRO | 1.0UF | 16WV | KPX | |
| C35 | | | C92-0004-05 | ELECTRO | 1.0UF | 16WV | K2P2 | |
| C36 ,37 | | | CK73FB1H103K | CHIP C | 0.010UF | K | KPX | |
| C36 ,37 | | | CK73FB1H103K | CHIP C | 0.010UF | K | K2P2 | |
| C38 | | | C92-0002-05 | CHIP TAN | 0.22UF | 35WV | K2P2 | |
| C38 | | | C92-0504-05 | CHIP TAN | 0.68UF | 20WV | KPXMM2 | |
| C38 | | | C92-0504-05 | CHIP TAN | 0.68UF | 20WV | M3EE9 | |
| C38 | | | C92-0504-05 | CHIP TAN | 0.68UF | 20WV | EM,E2 | |
| C39 -41 | | | CK73EF1C105Z | CHIP C | 1.0UF | Z | | |
| C43 | | | CE04EW1A470M | ELECTRO | 47UF | 10WV | | |
| C44 | | | CK73FB1H103K | CHIP C | 0.010UF | K | | |
| C47 | | | CK73EB1H104K | CHIP C | 0.10UF | K | | |
| C48 | | | CE04EW1A471M | ELECTRO | 470UF | 10WV | | |
| C49 | | | CK73FB1H103K | CHIP C | 0.010UF | K | | |
| C50 | | | CE04EW1C470M | ELECTRO | 47UF | 16WV | | |
| C51 -53 | | | CE04EW1A470M | ELECTRO | 47UF | 10WV | | |
| C54 | | | CK73FB1H273K | CHIP C | 0.027UF | K | | |
| C55 | | | CC73FSL1H101J | CHIP C | 100PF | J | | |
| C56 | | | CE04EW1E4R7M | ELECTRO | 4.7UF | 25WV | | |
| C57 ,58 | | | CK73EF1C105Z | CHIP C | 1.0UF | Z | | |
| C59 | | | CK73FB1H103K | CHIP C | 0.010UF | K | | |
| C60 | | | CE04EW1A470M | ELECTRO | 47UF | 10WV | | |
| C61 | | | C92-0504-05 | CHIP TAN | 0.68UF | 20WV | | |
| C62 | | | CE04EW1A470M | ELECTRO | 47UF | 10WV | | |
| C63 | | | CK73FB1H103K | CHIP C | 0.010UF | K | | |
| C64 | | | C92-0504-05 | CHIP TAN | 0.68UF | 20WV | | |
| C65 ,66 | | | CK73FB1H102K | CHIP C | 1000PF | K | | |
| C67 | | | CC73FCH1H050C | CHIP C | 5PF | C | | |
| C68 | | | C92-0501-05 | CHIP-TAN | 1.5UF | 6.3WV | | |
| C69 | | | CK73FB1H103K | CHIP C | 0.010UF | K | | |
| C70 | | | CC73FCH1H390J | CHIP C | 39PF | J | K2P2 | |
| C71 | | | CK73FB1H102K | CHIP C | 1000PF | K | | |
| C72 | | | CK73EB1H473K | CHIP C | 0.047UF | K | | |
| C73 | | | CK73FB1H102K | CHIP C | 1000PF | K | | |
| C74 | | | CK73EF1C105Z | CHIP C | 1.0UF | Z | | |
| C75 ,76 | | | CK73FB1H102K | CHIP C | 1000PF | K | | |
| C78 | | | CK73FB1H102K | CHIP C | 1000PF | K | | |
| C79 | | | CC73FCH1H330J | CHIP C | 33PF | J | | |
| C80 | | | CK73FB1H102K | CHIP C | 1000PF | K | | |
| C81 | | | CC73FCH1H220J | CHIP C | 22PF | J | | |

**L:**Scandinavia **K:**USA **P:**Canada
**Y:**PX(Far East, Hawaii) **T:**England **E:**Europe
**Y:**AAFES(Europe) **X:**Australia **M:**Other Areas

**TM-241A : (K,P,X,M,M2,M3,K2,P2)**
**TM-241E : (E,E2,E9,EM)**

⚠ indicates safety critical components.

# PARTS LIST

⁎ New Parts
Parts without **Parts No.** are not supplied.
Les articles non mentionnes dans le **Parts No.** ne sont pas fournis.
Teile ohne **Parts No.** werden nicht geliefert.

**TX-RX UNIT (X57-369X-XX)**

| Ref. No. 参照番号 | Address 位置 | New Parts 新 | Parts No. 部品番号 | Description 部品名／規格 | | | Destination 仕向 | Remarks 備考 |
|---|---|---|---|---|---|---|---|---|
| C82 | | | CK73FB1H103K | CHIP C | 0.010UF | K | | |
| C83 | | | CE04EW1A470M | ELECTRO | 47UF | 10WV | | |
| C84 | | | CK73FB1H103K | CHIP C | 0.010UF | K | | |
| C85 | | | CE04EW1A221M | ELECTRO | 220UF | 10WV | | |
| C86 | | | CE04EW1C100M | ELECTRO | 10UF | 16WV | | |
| C87 ,88 | | | CK73FB1H103K | CHIP C | 0.010UF | K | | |
| C89 -92 | | | CK73FB1H102K | CHIP C | 1000PF | K | | |
| C93 | | | CK73FB1H103K | CHIP C | 0.010UF | K | | |
| C94 | | | CE04EW1A470M | ELECTRO | 47UF | 10WV | | |
| C95 ,96 | | | CK73FB1H103K | CHIP C | 0.010UF | K | | |
| C97 | | | CE04EW1C102M | ELECTRO | 1000UF | 16WV | | |
| C99 | | | CK73FB1H102K | CHIP C | 1000PF | K | | |
| C100 | | | CK73EF1C105Z | CHIP C | 1.0UF | Z | | |
| C101 | | | CK73FB1H102K | CHIP C | 1000PF | K | | |
| C102 | | | CE04EW1C100M | ELECTRO | 10UF | 16WV | | |
| C104 | | | CC45SL2H220J | CERAMIC | 22PF | J | | |
| C105 | | | CK73FB1H102K | CHIP C | 1000PF | K | | |
| C106 | | | CC73FCH1H220J | CHIP C | 22PF | J | | |
| C107 | | | CK45B2H102K | CERAMIC | 1000PF | K | | |
| C108 | | | CM73F2H180J | CHIP C | 18PF | J | | |
| C109 | | | CC73FCH1H0R5C | CHIP C | 0.5PF | C | | |
| C110 | | | CC73FCH1H040C | CHIP C | 4PF | C | | |
| C111-113 | | | CK73FB1H102K | CHIP C | 1000PF | K | | |
| C114 | | | CC45SL2H390J | CERAMIC | 39PF | J | | |
| C115 | | | CC45SL2H470J | CERAMIC | 47PF | J | | |
| C116 | | | CC73FCH1H0R5C | CHIP C | 0.5PF | C | | |
| C117 | | | CC73FCH1H020C | CHIP C | 2.0PF | C | | |
| C118 | | | CM73F2H470J | CHIP C | 47PF | J | | |
| C119 | | | CK73FB1H102K | CHIP C | 1000PF | K | | |
| C120 | | | C92-0511-05 | CHIP TAN | 0.15UF | 35WV | | |
| C121 | | | CK73EF1C105Z | CHIP C | 1.0UF | Z | | |
| C122 | | | CK73FB1H102K | CHIP C | 1000PF | K | | |
| C123 | | | CK73EF1C105Z | CHIP C | 1.0UF | Z | | |
| C125 | | | CM73F2H050D | CHIP C | 5.0PF | D | | |
| C126 | | | CC73FSL1H101J | CHIP C | 100PF | J | | |
| C127 | | | CK73FB1H332K | CHIP C | 3300PF | K | | |
| C128 | | | CM73F2H150J | CHIP C | 15PF | J | | |
| C129 | | | CC73FCH1H270J | CHIP C | 27PF | J | K2P2 | |
| C201 | | | CK73FB1H102K | CHIP C | 1000PF | K | | |
| C202 | | | CK73FB1H103K | CHIP C | 0.010UF | K | | |
| C203 | | | CK73FB1H102K | CHIP C | 1000PF | K | | |
| C204 | | | CK73FB1H103K | CHIP C | 0.010UF | K | | |
| C205 | | | CE04NW0J221M | ELECTRO | 220UF | 6.3WV | | |
| C206 | | | CK73FB1E223K | CHIP C | 0.022UF | K | | |
| C207 | | | CK73FB1H102K | CHIP C | 1000PF | K | | |
| C208,209 | | | CC73FCH1H330J | CHIP C | 33PF | J | | |
| C210,211 | | | CK73FB1H103K | CHIP C | 0.010UF | K | | |
| C212-214 | | | CC73FSL1H101J | CHIP C | 100PF | J | | |
| C215-217 | | | CK73FB1H102K | CHIP C | 1000PF | K | | |
| C219,220 | | | CK73FB1H103K | CHIP C | 0.010UF | K | | |
| TC1 | | | C05-0349-05 | TRIMMING | 10PF | | | |
| CN1 | | | E40-3237-05 | PIN CONNECTOR(INT.SP) | | | | |
| CN2 | | | E40-5182-05 | PIN CONNECTOR(DRU) | | | | |
| CN3 ,4 | | | E40-5202-05 | PIN CONNECTOR(TR) | | | | |

**L:**Scandinavia **K:**USA **P:**Canada
**Y:**PX(Far East, Hawaii) **T:**England **E:**Europe
**Y:**AAFES(Europe) **X:**Australia **M:**Other Areas

**TM-241A : (K,P,X,M,M2,M3,K2,P2)**
**TM-241E : (E,E2,E9,EM)**

⚠ indicates safety critical components.

# PARTS LIST

⁎ New Parts
Parts without **Parts No.** are not supplied.
Les articles non mentionnes dans le **Parts No.** ne sont pas fournis.
Teile ohne **Parts No.** werden nicht geliefert.

**TX-RX UNIT (X57-369X-XX)**

| Ref. No. 参照番号 | Address 位置 | New Parts 新 | Parts No. 部品番号 | Description 部品名／規格 | Destination 仕向 | Remarks 備考 |
|---|---|---|---|---|---|---|
| CN5 | | | E40-5183-05 | PIN CONNECTOR(DTM) | | |
| CN201,202 | | | E40-5203-05 | PIN CONNECTOR(CONT) | | |
| CN203 | | | E40-5185-05 | PIN CONNECTOR(DRU) | | |
| CN204 | | | E40-5187-05 | PIN CONNECTOR(DRU) | | |
| CN205 | | | E40-5341-05 | PIN CONNECTOR | | |
| J1 | | | E11-0425-05 | EXT SP JACK | | |
| J201 | | | E06-0860-05 | MIC RECEPTACLE | | |
| TP1 ,2 | | | E23-0465-05 | TEST TERMINAL | | |
| W1 | | | E33-1902-05 | FINISHED WIRE SET(HET) | | |
| W201 | | | E31-6003-15 | CONNECTING WIRE(CTCSS) | | |
| W202 | | | E33-1871-15 | FINISHED WIRE SET | KPMEX | |
| W202 | | | E33-1871-15 | FINISHED WIRE SET | EM,E9 | |
| W202 | | | E33-1871-15 | FINISHED WIRE SET | K2P2 | |
| | | | J30-0564-05 | SPACER | | |
| | | | J31-0534-05 | COLLAR (LED) | | |
| CD1 | | | L79-1013-05 | CERAMIC DISCRI(CDBM455C16) | | |
| CF1 | | | L72-0372-05 | CERAMIC FILTER(CFWM455F) | | |
| L1 -4 | | | L34-4080-05 | COIL | | |
| L5 | | | L34-0956-05 | COIL | KPXMM2 | |
| L5 | | | L34-0956-05 | COIL | M3EE9 | |
| L5 | | | L34-0956-05 | COIL | EM,E2 | |
| L5 | | | L34-4113-05 | COIL | K2P2 | |
| L6 | | | L30-0005-05 | COIL | KPXMM2 | |
| L6 | | | L30-0005-05 | COIL | M3EE9 | |
| L6 | | | L30-0005-05 | COIL | EM,E2 | |
| L6 | | | L34-2157-05 | COIL | K2P2 | |
| L7 | | | L40-1001-48 | SMALL FIXED INDUCTOR(10UH) | | |
| L8 | | | L34-1239-05 | COIL | | |
| L9 | | | L34-0895-05 | COIL | | |
| L10 | | | L34-0742-05 | COIL | | |
| L11 | | | L34-0908-05 | COIL | | |
| L12 ,13 | | | L34-0499-05 | COIL | | |
| L14 | | | L40-3392-48 | SMALL FIXED INDUCTOR(3.3UH) | | |
| L15 | | | L34-0499-05 | COIL | | |
| L16 | | | L40-1095-48 | SMALL FIXED INDUCTOR(1UH) | K2P2 | |
| L17 | | | L40-1892-19 | SMALL FIXED INDUCTOR(1.8UH) | K2P2 | |
| X1 | | | L77-1473-05 | CRYSTAL RESONATOR(10.245MHz) | KPXMM2 | |
| X1 | | | L77-1473-05 | CRYSTAL RESONATOR(10.245MHz) | M3EE9 | |
| X1 | | | L77-1473-05 | CRYSTAL RESONATOR(10.245MHz) | EM,E2 | |
| X1 | | | L77-1312-05 | CRYSTAL RESONATOR(30.37MHz) | K2P2 | |
| X2 | | | L77-1405-05 | CRYSTAL RESONATOR(12.8MHz) | | |
| X201 | | | L77-1397-05 | CRYSTAL RESONATOR(4.194304MHz) | | |
| XF1 | | | L71-0228-15 | CRYSTAL FILTER(10.7MHz) | KPXMM2 | |
| XF1 | | | L71-0228-15 | CRYSTAL FILTER(10.7MHz) | M3EE9 | |
| XF1 | | | L71-0228-15 | CRYSTAL FILTER(10.7MHz) | EM,E2 | |
| XF1 | | | L71-0270-05 | CRYSTAL FILTER(30.825MHz) | K2P2 | |
| R1 | | | RK73FB2A682J | CHIP R 6.8K J 1/10W | KPX | |
| R1 | | | RK73FB2A682J | CHIP R 6.8K J 1/10W | K2P2 | |
| R2 | | | RK73FB2A223J | CHIP R 22K J 1/10W | KPXMM2 | |
| R2 | | | RK73FB2A223J | CHIP R 22K J 1/10W | M3EE9 | |
| R2 | | | RK73FB2A223J | CHIP R 22K J 1/10W | EM,E2 | |
| R2 | | | R92-0670-05 | CHIP R 0 OHM | K2P2 | |
| R3 | | | RK73FB2A274J | CHIP R 270K J 1/10W | KPXMM2 | |

**L:**Scandinavia **K:**USA **P:**Canada
**Y:**PX(Far East, Hawaii) **T:**England **E:**Europe
**Y:**AAFES(Europe) **X:**Australia **M:**Other Areas

**TM-241A : (K,P,X,M,M2,M3,K2,P2)**
**TM-241E : (E,E2,E9,EM)**

⚠ indicates safety critical components.