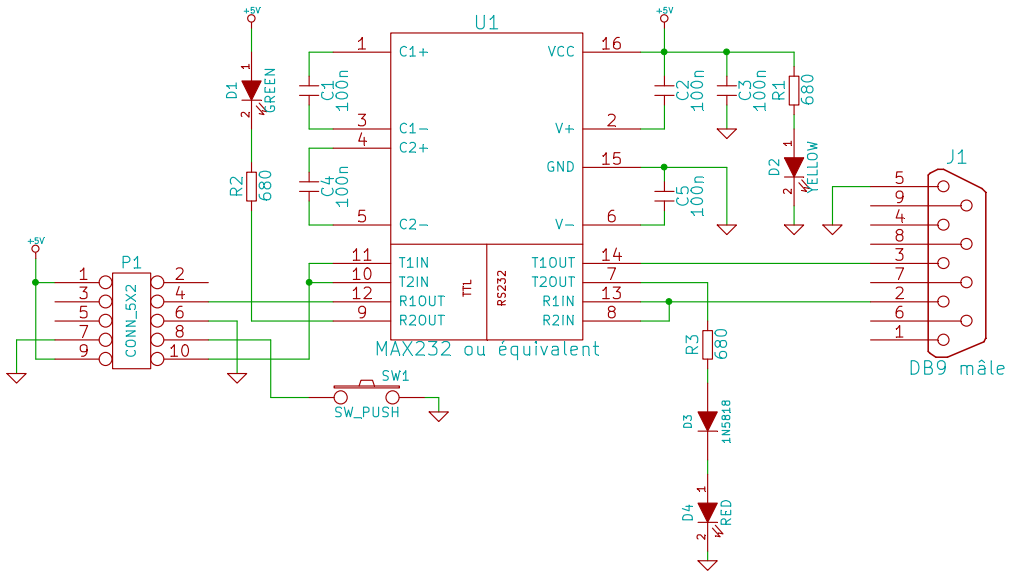

Programmateur µC RENESAS par RS232
HE−10 FoUSB / Câble null−modem
www.shibby.fr

File: M3A0806.sch
Sheet: /

Title: MF Ten−Nine / M3A0806

Size: A4	Date: 28 nov 2011	**Rev: AA**
KiCad E.D.A. eeschema (2011−07−08 BZR 3044)−stable		Id: 1/1